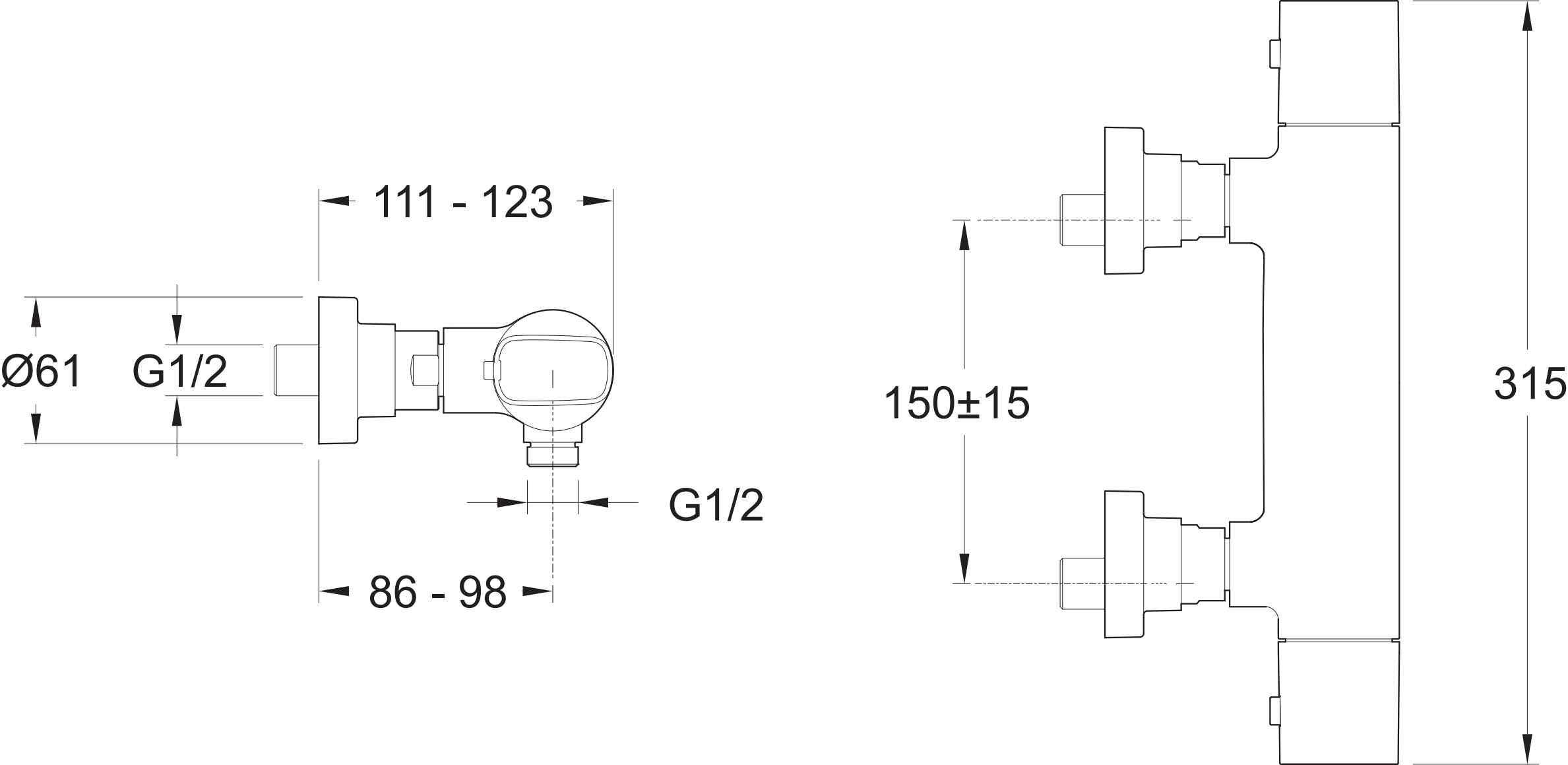
111 - 123
Ø61
G1/2
G1/2
86 - 98
150±15
315